TITLE	DWG. NO.	SHEET NO.	REV
WIRING INSTRUCTIONS FOR ANALOG DC VOLTMETER	DC_AVM	1 of 1	A

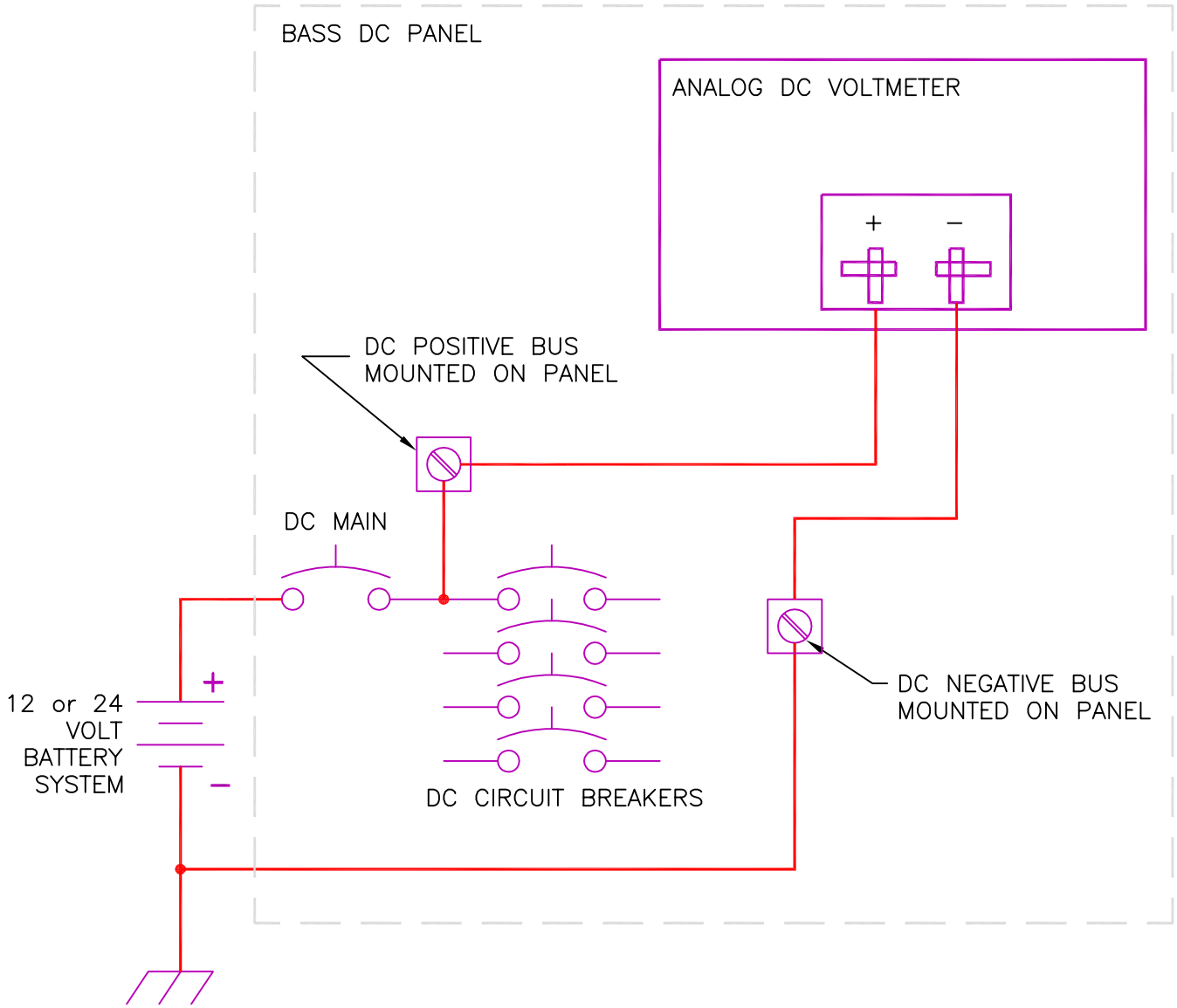

File: DC_AVM.dwg

NO.	REVISION	BY	DATE
A	ENGINEERING RELEASE	JW	5/11/02

bass products llc
435 Lake Ave., Bristol CT 06010